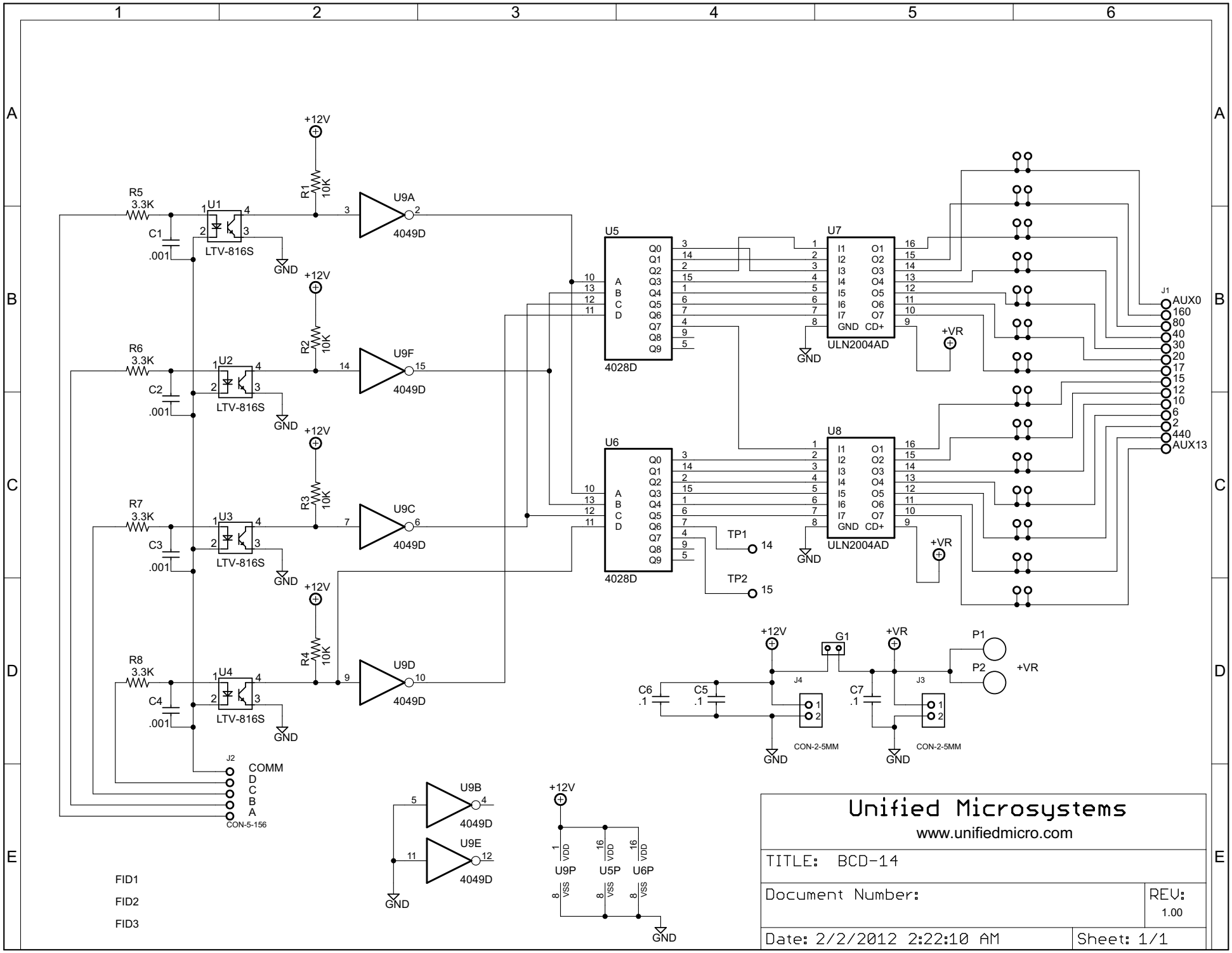
+12V
R1 10K
R2 10K
R3 10K
R4 10K
R5 3.3K
R6 3.3K
R7 3.3K
R8 3.3K
C1 .001
C2 .001
C3 .001
C4 .001
U1
U2
U3
U4
LTV-816S
GND
U9A
U9F
U9C
U9D
U9B
U9E
4049D
U5
U6
4028D
U7
U8
ULN2004AD
+VR
TP1
TP2
J1
AUX0
160
80
40
30
20
17
15
12
10
6
2
440
AUX13
J2
COMM
D
C
B
A
CON-5-156
C6 .1
C5 .1
C7 .1
G1
J4
J3
P1
P2
CON-2-5MM
U9P
U5P
U6P
VDD
VSS
FID1
FID2
FID3
Unified Microsystems
www.unifiedmicro.com
TITLE: BCD-14
Document Number:
REV: 1.00
Date: 2/2/2012 2:22:10 AM
Sheet: 1/1